# OPEN PANZER Sound Card v2

Based on a PJRC Teensy 3.2 processor

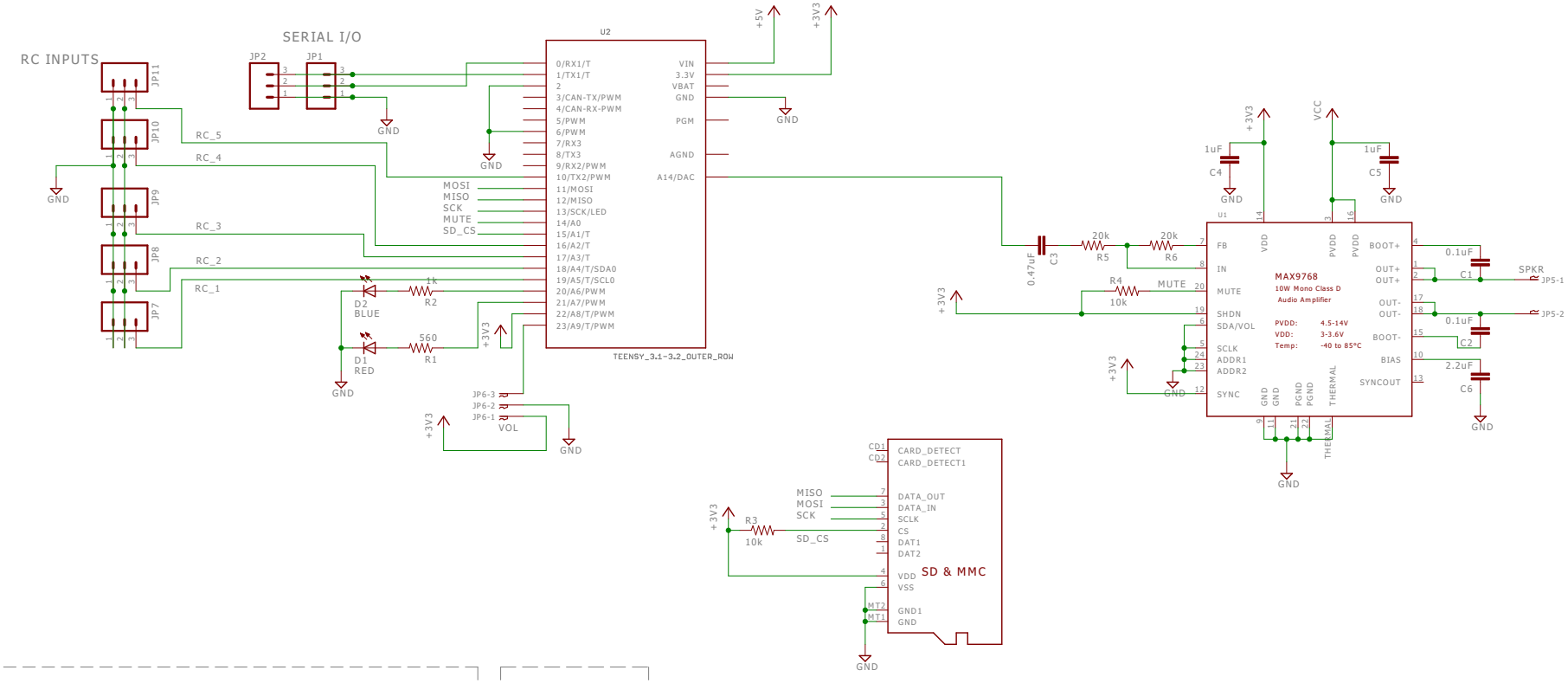


| | |
|---|---|
| Title: | OP_Sound_v2_r3 |
| Version: | 2 (revision 3) |
| 2/3/2018 8:23 PM | |
| Drawn By: Open Panzer | 1/1 |